DAMPER OVERVIEW

TYPE		FIELD OF APPLICATION	FUNCTIONAL PRINCIPLE	STROKE DIAMETER	ATTACHMENT	DAMPING FORCE
SDLL		Secondary and Primary damper; Vertical and Horizontal	Reciprocal oil flow	50 -200mm Ø 83mm		up to **7 kN** 0.1 m/s
SDL		Secondary and Primary damper; Vertical and Horizontal	Unidirectional oil flow Light design	50 -200mm Ø 83mm		up to **10 kN** 0.1 m/s
SDS		Secondary and Primary damper; Vertical and Horizontal	nidirectional oil flow Heavy Design	50 -300mm Ø 116 mm		up to **10 kN** 0.1 m/s
SDY		Yaw-damper	Unidirectional oil flow	50 -300mm Ø 116 mm		up to **16 kN** 0.01 m/s
SDLK		Inter car damper for Light rail vehicles	Unidirectional oil flow Light design	300 -500mm Ø 86mm		up to **10 kN** 0.1 m/s

» Knorr-Bremse dampers – Overview

CUSTOM-MADE DAMPERS

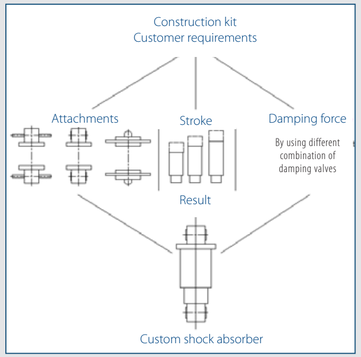

Knorr-Bremse dampers are custom designed for various unique rail applications, with respect to damping force characteristics end mountings, family of sizes etc.

TYPICAL PERFORMANCE CURVE

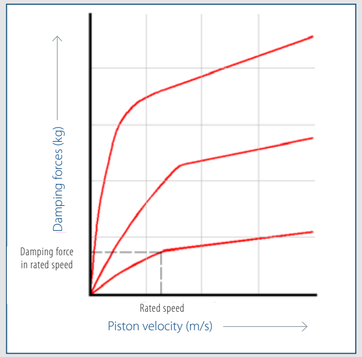

Knorr-Bremse Systeme für Schienenfahrzeuge GmbH
Moosacher Straße 80
80809 Munich
Germany
Tel: +49 89 3547-0
Fax: +49 89 3547-2767
WWW.KNORR-BREMSE.COM

P-259-EN 09.2014

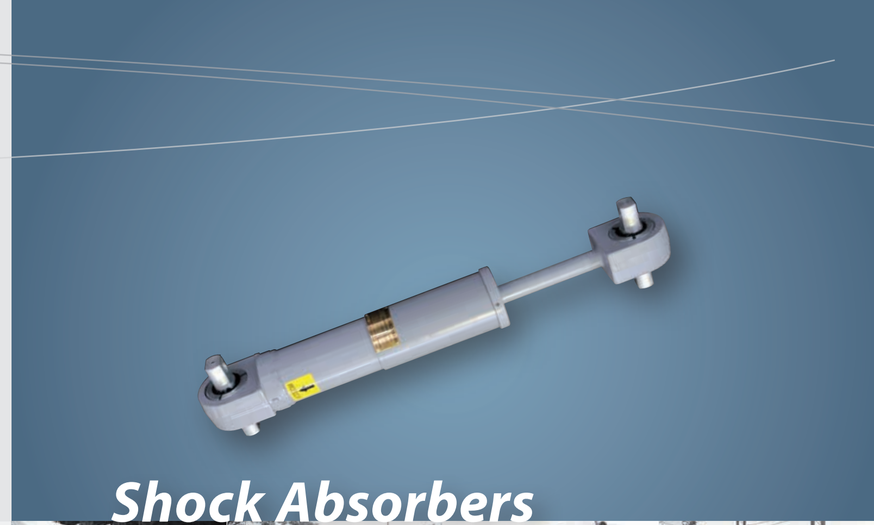

Shock Absorbers

APPLICATIONS

Locomotives | Passenger Coaches | Regional and Commuter Trains

KNORR-BREMSE
Innovations For Entrance Systems
merak
SIGMA
Microelettrica Scientifica
POWERTECH
WESTINGHOUSE platform screen doors
NEW YORK AIR BRAKE
ZELISKO
SYDAC
RAILSERVICES

Knorr-Bremse Group

This publication may be subject to alteration without prior notice. A printed copy of this document may not be the latest revision. Please contact your local Knorr-Bremse representative or check our website www.knorr-bremse.com for the latest update. The figurative mark „K" and the trademarks KNORR and KNORR-BREMSE are registered in the name of Knorr-Bremse AG. Copyright 2013 © Knorr-Bremse AG. All rights reserved. Including industrial property rights applications. Knorr-Bremse AG retains any power of disposal, such as for copying and transferring.

KNORR-BREMSE

SHOCK ABSORBERS

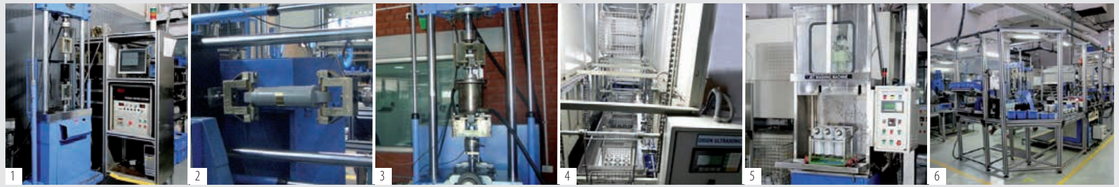

1 Hydraulic servo control testing machine vertical mode
2 Horizontal mode
3 Type testing
4 Ultrasonic cleaning
5 Jet washing
6 Damper assembly zone

HEAVY-DUTY SHOCK ABSORBER / OIL DAMPERS FOR RAILWAY APPLICATIONS.

Knorr-Bremse provides a full range of damping solutions for passenger trains, locomotives and suburban multiple units. The dampers have proven to be long-lasting and can withstand any environmental conditions. They are also easy to maintain and are certified to IRIS and ISO 9001.

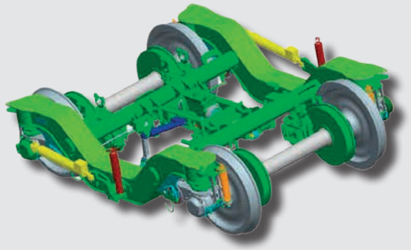

TYPES

- Primary vertical damper
- Secondary vertical damper
- Secondary horizontal damper
- Yaw damper

DESIGN / WORKING PRINCIPLE

AT THE TENSION STROKE:

The check valve (1) in the piston (2) closes, and the oil is forced through the damping valve (3), thus the damping force is realized. Simultaneously, the check valve (4) in the cylinder bottom (5) opens, and space (A) below the piston is filled with oil.

AT THE COMPRESSION STROKE:

The check valve (4) in the cylinder bottom (5) closes. The oil from space (A) flows into space (B) through the opened check valve (1) of the piston (2). Due to the movement of the piston rod into the cylinder the volume (A) decreases and the oil is again forced through the damping valve (3), thus damping is being accomplished.

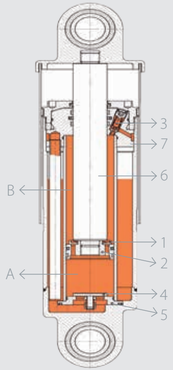

Unidirectional flow, design

ADVANTAGES

- Unidirectional flow, design
- Durability because of extended interval of overhaul, hence lower maintenance costs
- Reconditionable
- High level of standardization due to a modular design
- Stable damping characteristics even with maximum load
- Symmetrical damping force in tension and compression by design
- No priming required before installation in vehicle
- Reliable and robust
- Easy to install
- Long service life

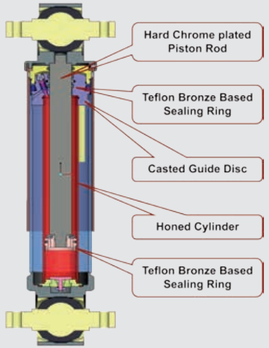

Double acting, telescopic, hydraulic with unidirectional flow, design

ATTACHMENTS

We provide a full range of attachements. Some examples of this range are shown below.

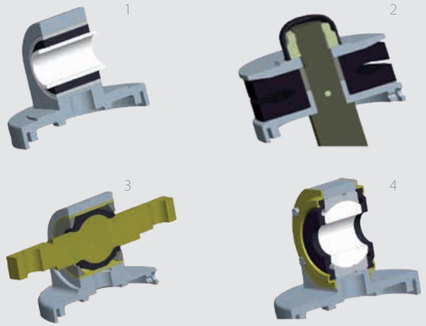

1 Rubber sleeves with steel bushes
2 Rubber disc or rubber flange type mounting
3 Spherical block type ends
4 Articulation bearing type ends