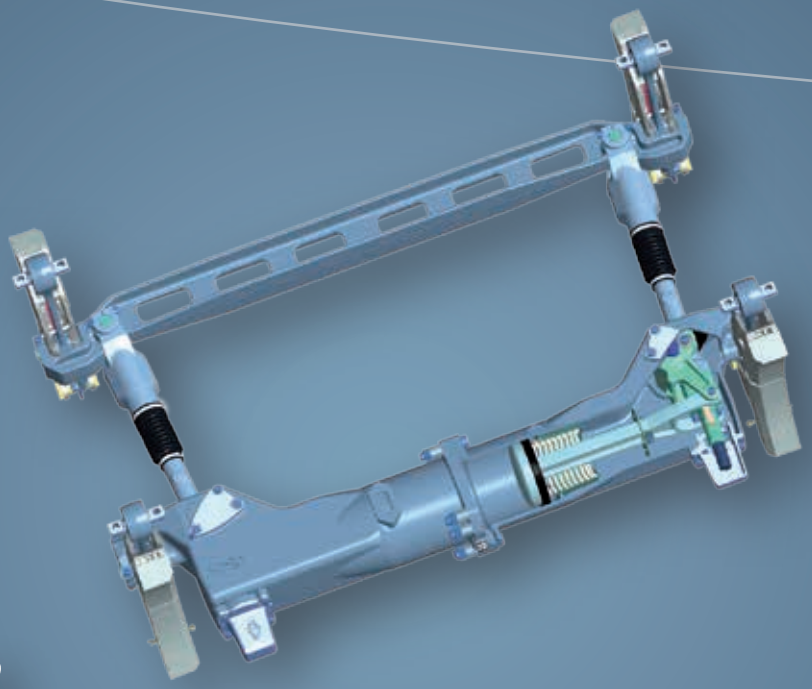

CFCB
Compact Freight Car Brake

APPLICATIONS

All freight cars with Y25 bogie | Customizing for other bogies possible | Low noise freight cars | Light weight freight cars | Freight cars in severe environmental condition

KNORR-BREMSE

LIGHT, COMPACT AND LOW-MAINTENANCE

The modern design of the CFCB compact freight car brake reduces costs.

REDUCED WEIGHT, SIMPLER INSTALLATION, improved performance – all in all, a highly convincing design

DESIGN

Operation of freight cars is becoming increasingly economical. The CFCB (Compact Freight Car Brake) from Knorr-Bremse offers a number of significant improvements for vehicle manufacturers and operators alike. CFCB is considerably lighter and more efficient than conventional brakes - and simpler than ever to install.

ADVANTAGES

- Optimum kinematics
- Modular design
- Low noise
- Low LCC
- Low air consumption
- Can be equipped with bogie mounted and carbody mounted manual parking brake
- Cost saving installation
- Low weight

COMPACT FREIGHT CAR BRAKE – CFCB

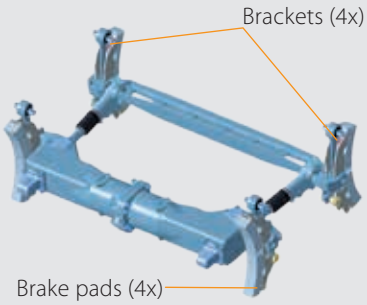

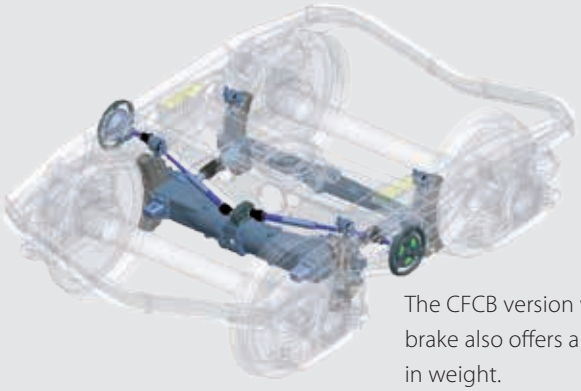

The CFCB version with manual parking brake also offers a significant reduction in weight.

TECHNICAL DATA

- block force
  >> of service brake 38 kN
  >> of manual parking brake min. 28 kN
- weight of service brake 225 kg (BG version) / 257 kg (BGU version)
- adjusting capacity 205 mm
- permissible lateral axle movement +/-20 mm
- weight with manual parking brake 282 kg (BGU version)

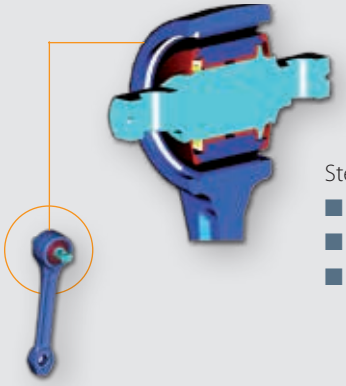

Steel-rubber-steel sleeves
- less vibration
- low noise
- minimal wear

KEY FEATURES

Preassembled
- ready to install
- standard interface
- no welding or installtion efforts in the car body

Push brake with two single acting slack adjusters
- whole block and wheel wear can be compensated
- good accessibility for resetting

Very stiff design and sealed needle and lide bearings
- high efficiency
- low maintenance
- low air consumption

Modular design
- block force is adjustable by changing the internal ratio without changing installation space or interface to the bogie

New vibration damped suspension
- allows max. lateral movement and tilt of the axle with min. bearing clearance
- less generation of noise

Version with integrated manual parking brake
- hand wheel position in the bogie
- hand wheel position in the car body
- integrated mechanical indication of the status of the manual parking brake

P-1186-EN 09.2014

Knorr-Bremse Systeme für Schienenfahrzeuge GmbH

Moosacher Straße 80
80809 Munich
Germany
Tel: +49 89 3547-0
Fax: +49 89 3547-2767

WWW.KNORR-BREMSE.COM

KNORR-BREMSE

iFE Innovations For Entrance Systems

merak

SIGMA

Microelettrica Scientifica

POWERTECH

WESTINGHOUSE platform screen doors

NEW YORK AIR BRAKE

ZELISKO

SYDAC

RAILSERVICES always on track

Knorr-Bremse Group

This publication may be subject to alteration without prior notice. A printed copy of this document may not be the latest revision. Please contact your local Knorr-Bremse representative or check our website www.knorr-bremse.com for the latest update. The figurative mark „K" and the trademarks KNORR and KNORR-BREMSE are registered in the name of Knorr-Bremse AG. Copyright 2013 © Knorr-Bremse AG. All rights reserved. Including industrial property rights applications. Knorr-Bremse AG retains any power of disposal, such as for copying and transferring.